Vertical Toggle Clamp
Part No. GH-14412

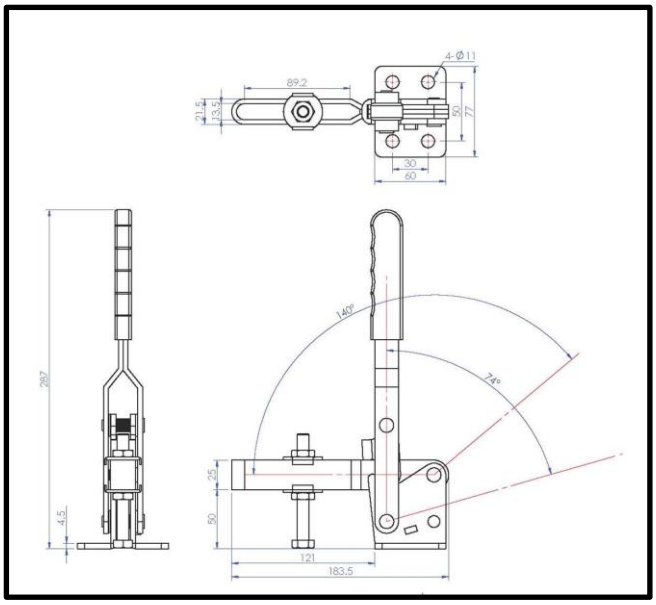

Product Description

Vertical Toggle Clamp Flat Base Slotted Arm Size 300Kg

Key Features

Overall Height:	**287mm**
Underarm Height:	**50mm**
Arm Length:	**121mm**
Holding Force:	**300Kg**

Other Features

Arm Opens:	**140°**
Handle Opens:	**74°**
Weight:	**1.27Kg**

Material

Clamp:	**Zinc Plated Mild Steel**
Spindle:	**Zinc Plated Mild Steel**
Handle:	**uPVC**

What's In The Bag?

GH-14412: Toggle Clamp
2x FW-121: Flanged Washers For 10mm Spindle
SA-109015: M10x90mm Zinc Plated Steel Spindle With Nuts