Vertical Toggle Clamp
Part No. GH-14502-A

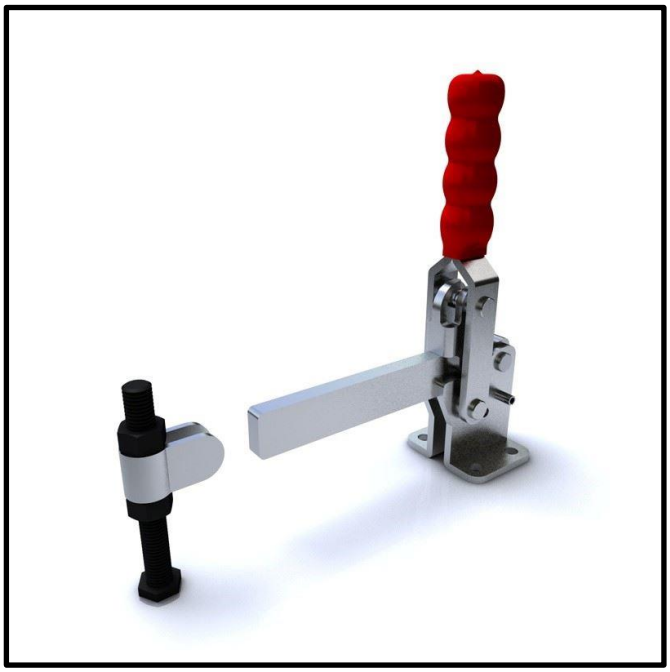

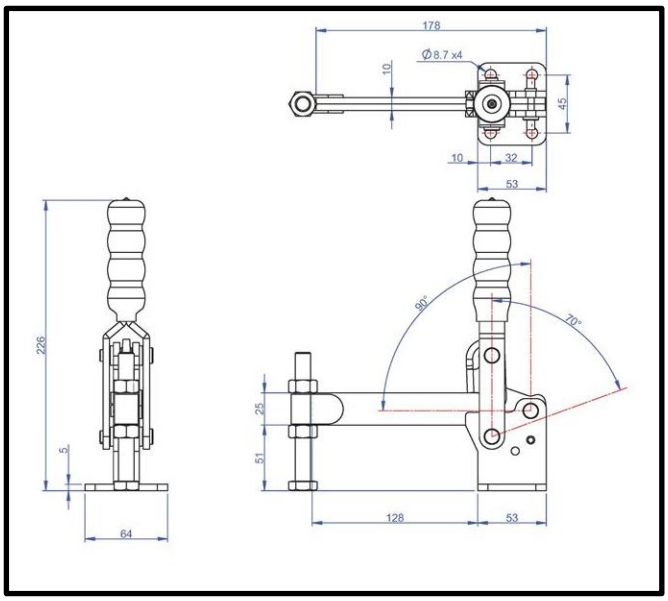

Product Description

Vertical Toggle Clamp Flat Base
Solid Arm Size 450Kg

Key Features

Overall Height:	226mm
Underarm Height:	51mm
Arm Length:	128mm
Holding Force:	450Kg

Other Features

Arm Opens:	90°
Handle Opens:	70°
Weight:	1.3Kg

Material

Clamp:	Zinc Plated Mild Steel
Spindle:	Zinc Plated Mild Steel
Handle:	uPVC

What's In The Bag?

GH-14502-A: Toggle Clamp
SA-121017: M12x100mm Zinc Plated Steel Spindle With Nuts
BR-120: Neoprene Cap for 12mm Spindle

goodhanduk.co.uk
01908 221 151