Horizontal Toggle Clamp
Part No. GH-203-FSS

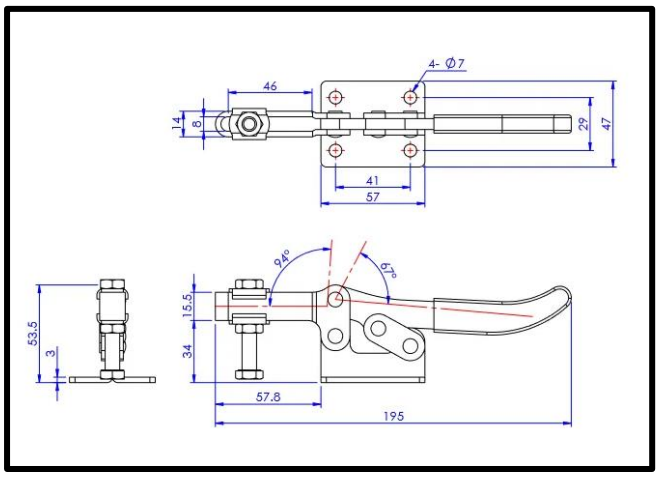

Product Description

Stainless Steel Horizontal Clamp
Flat Base Size 227daN

Key Features

Overall Height:	53.5mm
Arm Length:	57.8mm
Underarm Height:	34mm
Holding Force:	227daN

Other Features

Arm Opens:	94°
Handle Opens:	67°
Weight:	0.35Kg

Material

Toggle Clamp:	304 Stainless Steel
Handle:	uPVC
Spindle:	304 Stainless Steel
Flanged Washers:	304 Stainless Steel

Whats In The Bag?

Toggle Clamp:	GH-203-FSS
Spindle:	SA-085012-SS
Flanged Washers:	FW-516-SS

goodhanduk.co.uk
01908 221 151