Super Air Amplifier
Part No. 120222

Manufacturing Intelligent Compressed Air Products Since 1983

Product Description

2" Super Air Amplifier Kit In Aluminium. 42mm Bore. Amplification Ratio 18-1

Key Features

Air Consumption:	**439L/m**
Amplification Ratio:	**18:1**
Output Air Volume:	**7902L/m**
Sound Level:	**72dBA**
Material:	**Aluminium**

****All measurements based on 5.5Bar****

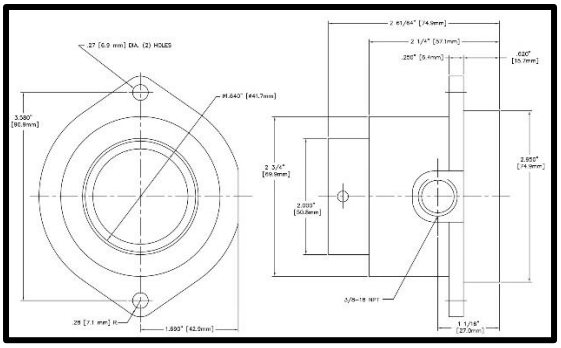

What's In The Bag?

Air Amplifier	**120022**
Shim Set	**120322**
Filter Separator	**9001**
Pressure Regulator with Gauge	**9008**
Mounting Kit	**9046**

Supplied By

GoodHand UK

goodhanduk.co.uk

01908 221 151